EMPOWERING OUR WORLD
WITH CLEAN ENERGY

Xiamen Kseng Metal Tech. Co, Ltd

Email: info@xmkseng.com | **Web:** www.xmkseng.com | **Tel:** +86 0592-5777971 / +86 0592-5795673
Office Add: 6-8F, Huixin Wealth Centre, No. 891, Fanghu North 2nd Rd., Huli Dist., Xiamen, Fujian, China.
Factory Add: No.1021-6, Xiangbei Road, Maxiang Street, Xiangan Dist., Xiamen, Fujian, China.

KSENG

EN
DE

INSTALLATION MANUAL
INSTALLATIONSANLEITUNG

Adjustable Tilt Angle Easy Solar Bracket
Verstellbarer Fuß einfacher Ständer

XMKS-V1.2-2023-06

www.xmkseng.com

INSTALLATION INSTRUCTIONS

1.Installation tools

1.Werkzeuge für die Installation

Tape
Meßband

Allen Key 6mm
(M8 Hexagon Socket Screw)
Inbusschlüssel 6mm

13mm Spanner
13mm Schraubenschlüssel

(Please continue reading the content on the back)

KSENG

2.Assembly instructions

2.Installationsschritte

2.1 Locate base position.

2.1 Auffinden der Basisposition.

2.11 Take out the pre-installed adjustable front and rear feet separately. Place the front and rear adjustable feet in the corresponding position according to the design drawing and the hole size on the back of the panels, and fix the front and rear foot bases with wood screws.

2.11 Bringen Sie die vormontierten verstellbaren Vorder- und Hinterfüße separat heraus. Platzieren Sie die vorderen und hinteren verstellbaren Füße in den entsprechenden Positionen gemäß der Konstruktionszeichnung und der Größe der Löcher auf der Rückseite der Baugruppe, und befestigen Sie die vorderen und hinteren Fußsockel mit Holzschrauben.

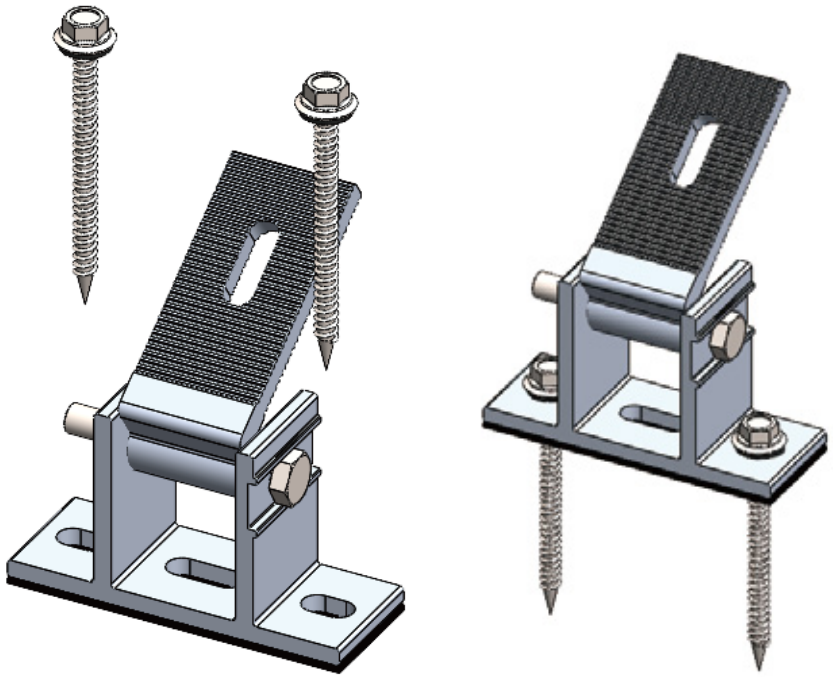

(Please continue reading the content on the back)

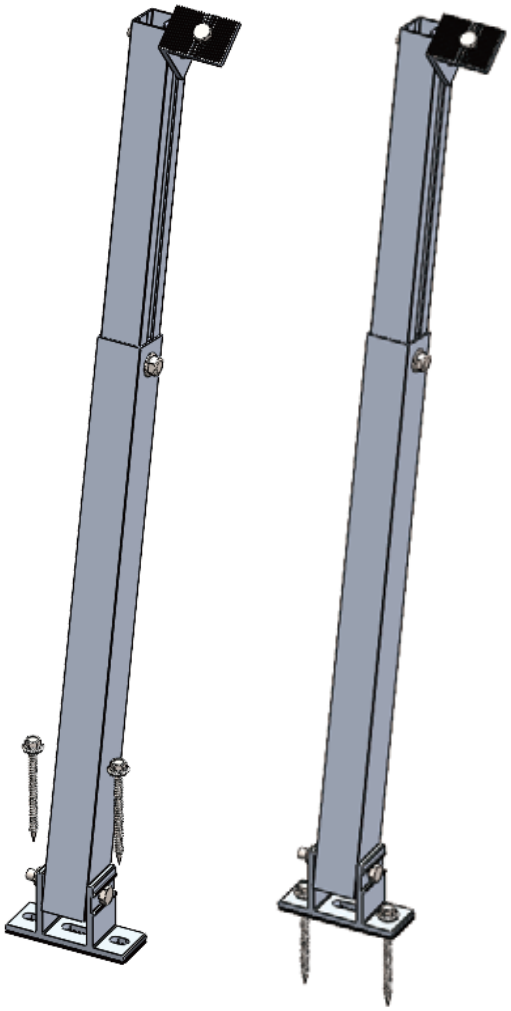

2.12 Repeat the above steps to secure all adjustable feet.

2.12 Wiederholen Sie die obigen Schritte, um alle verstellbaren Füße zu befestigen.

(Please continue reading the content on the back)

KSENG

2.2 Solar panel installation.

2.2 Schalttafelmontage.

2.21 According to the design drawings, place the panel horizontally, and fix the bolts on the front feet to the panel through the holes on the back of the panel.

2.21 Legen Sie das Paneel gemäß der Konstruktionszeichnung waagerecht und befestigen Sie die Schrauben der vorderen Stellfüße durch die Löcher auf der Rückseite des Paneels am Paneel.

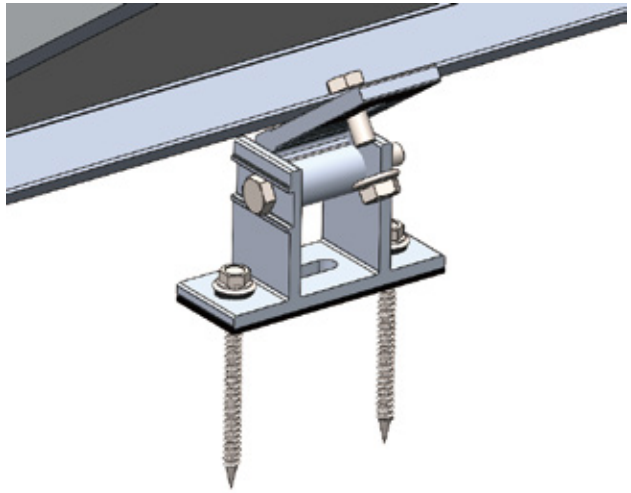

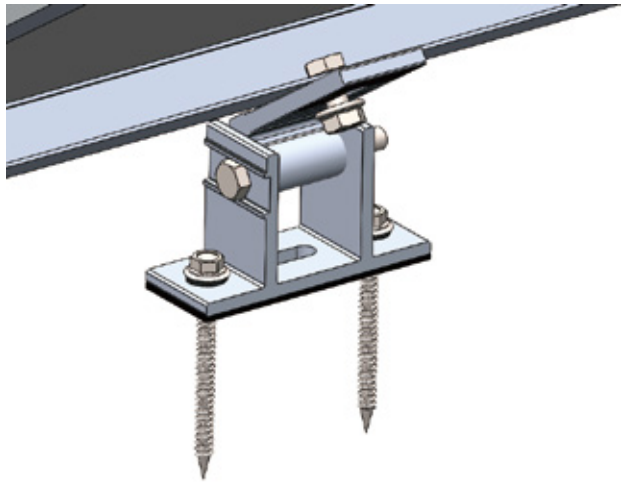

(Please continue reading the content on the back)

2.22 Mount the rear feet to the top frame of the solar panel.

2.22 Auch hier werden die verstellbaren hinteren Füße durch die Löcher auf der Rückseite der Platte mit ihr verschraubt.

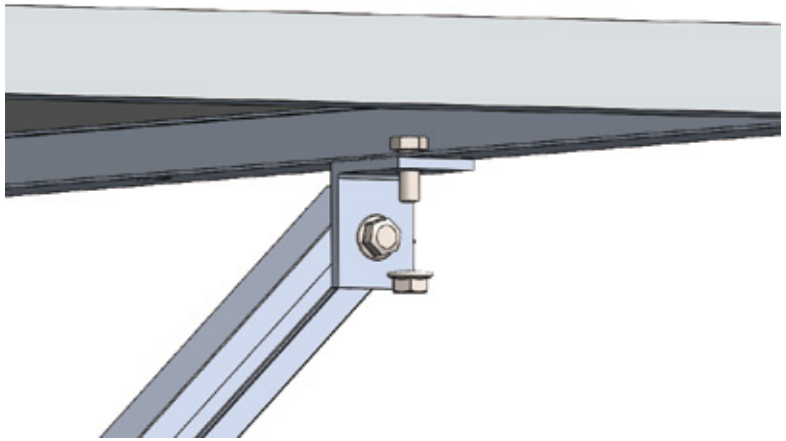

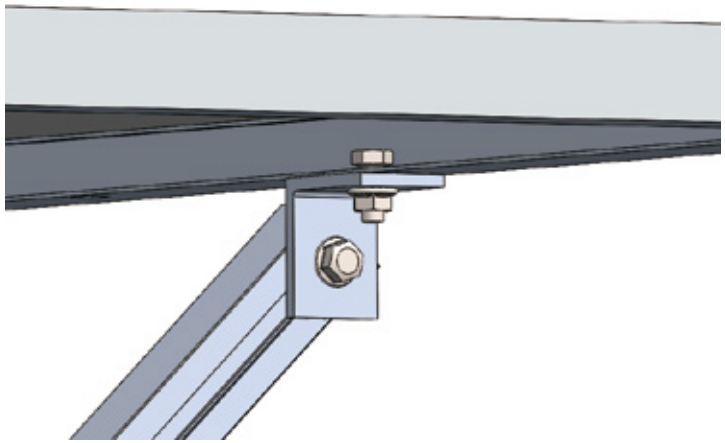

2.23 Repeat the above steps to fix all the front and rear feet to the panel, and the panel installation is completed.

2.23 Wiederholen Sie die obigen Schritte, um alle vorderen und hinteren Füße an der Platte zu befestigen, und die Montage der Platte ist abgeschlossen.

(Please continue reading the content on the back)

KSENG

2.3 Tilt angle adjustment.

2.3 Einstellung des Winkels.

2.31 Adjust the height of the rear feet and adjust the panel to the required angle.

2.31 Sobald die Platte installiert ist, stellen Sie die Höhe des hinteren Fußes ein, indem Sie die Schraube in der Mitte des hinteren Fußes verstellen, um die Platte auf den gewünschten Winkel einzustellen.

2.4 Completed.

2.4 Einbau abgeschlossen.

2.41 Tighten all screws and bolts to the system.

2.41 Sichern Sie einfach alle Schrauben an ihrem Platz.

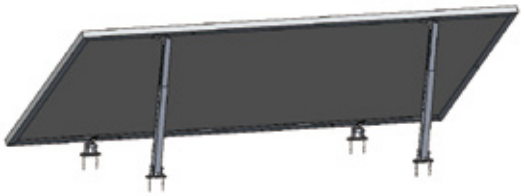

(Please continue reading the content on the back)

Purchaser/End User/Installer Notice:

Purchasers should confirm whether they are able to install this product and obtain relevant permits in accordance with local laws and regulations, including but not limited to government, community, adjacent property owners, and property rights holders.

Purchasers should engage qualified installers, professionals, or self-install only where permitted by law.

Purchasers should also ensure that the installation supports the building or its accessories safely and meets installation requirements, and is sufficient to support the product and its photovoltaic power generation system for over 20 years.

Purchasers should not install or use this product in environments with corrosive air or water, such as acids or alkalis in the vicinity.

Purchasers should fully assess and bear the consequences of product installation and usage and their impact on the surroundings, including but not limited to potential lightning strikes, electrical or magnetic conduction, light reflection/pollution, obstruction of passage, collision with people, snow accumulation and ice shedding, depreciation of buildings, and their consequences.

Purchasers are solely responsible for safety during installation, throughout the installation process, and subsequent usage, and/or any impact on third parties.

After installing the product, purchasers or their appointed installers should carry out waterproof, leak-proof, and anti-seepage construction at the junction of the product and the building to protect the building supporting the product, and conduct periodic inspections and maintenance in the future (at intervals not exceeding 1 year).

Purchasers should be aware that nothing other than the photovoltaic power generation system should be supported on this product, and no additional weight should be placed on the product during installation or subsequent usage, particularly human suspension or leaning. It should not be used for any purpose other than supporting photovoltaic brackets. Purchasers should be aware that nothing other than the photovoltaic power generation battery system should be supported on this product, and no additional weight should be placed on the product during installation or subsequent usage,

(Please continue reading the content on the back)

KSENG

particularly human suspension or leaning. It should not be used for any purpose other than supporting photovoltaic brackets.

We shall not be liable for any consequences resulting from failure to comply with local legal requirements and/or failure to follow instructions, warnings, etc., during the installation of this product, nor shall we be liable for any losses to the supporting building or any third party resulting from the installation process or subsequent usage, nor shall we be liable for any multiple installations, disassembly and reuse, or second-hand purchases of this product.

Laissez l'énergie propre mieux
protéger notre terre

Xiamen Kseng Metal Tech. Co, Ltd

Email: info@xmkseng.com | **Web:** www.xmkseng.com | **Tel:** +86 0592-5777971 / +86 0592-5795673
Office Add: 6-8F, Huixin Wealth Centre, No. 891, Fanghu North 2nd Rd., Huli Dist., Xiamen, Fujian, China.
Factory Add: No.1021-6, Xiangbei Road, Maxiang Street, Xiangan Dist., Xiamen, Fujian, China.

KSENG

FR
IT

MANUEL D'INSTALLATION
MANUALE DI INSTALLAZIONE

Support Solaire Universel Réglable
Impalcatura per pannelli solari con piedi ad inclinazione regolabile

XMKS-V1.2-2023-06

www.xmkseng.com

INSTRUCTION D'INSTALLATION

1.Installation tools

1.Werkzeuge für die Installation

Mètre à ruban
Metro a nastro

Clef Allen 6mm
(Vis hexagonale intérieure M8)
chiave a brugola 6mm

Clef de 13 mm
Chiave inglese esagonale
da 13mm

(Please continue reading the content on the back)

2.Instructions d'installation

2.Istruzione per l'installazione

2.1 Localiser la position de base.

2.1 Individuazione della posizione in cui il prodotto dovrà essere collocato.

2.11 Retirez les pieds avant et arrière réglables préinstallés séparément. Placez les pieds réglables avant et arrière dans la position correspondante selon le dessin de conception et la taille du trou à l'arrière des panneaux, et fixez les bases des pieds avant et arrière avec des vis à bois.

2.11 Tirare fuori il prodotto parzialmente assemblato dall'imballaggio.Allineare i fori e le viti seguendo le immagini fornite dai disegni di progettazione e fissare a terra il prodotto con le viti lasciate a disposizione.

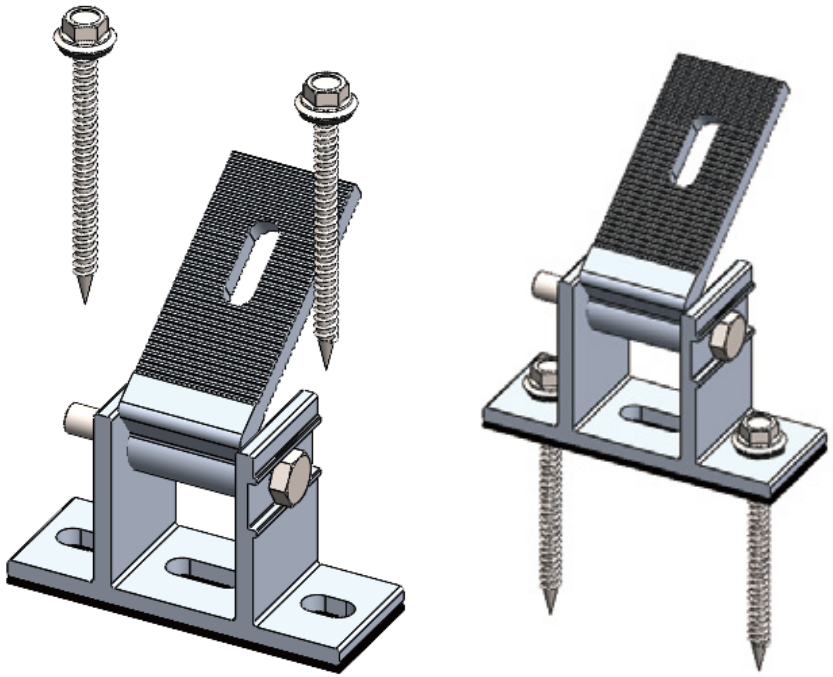

(Please continue reading the content on the back)

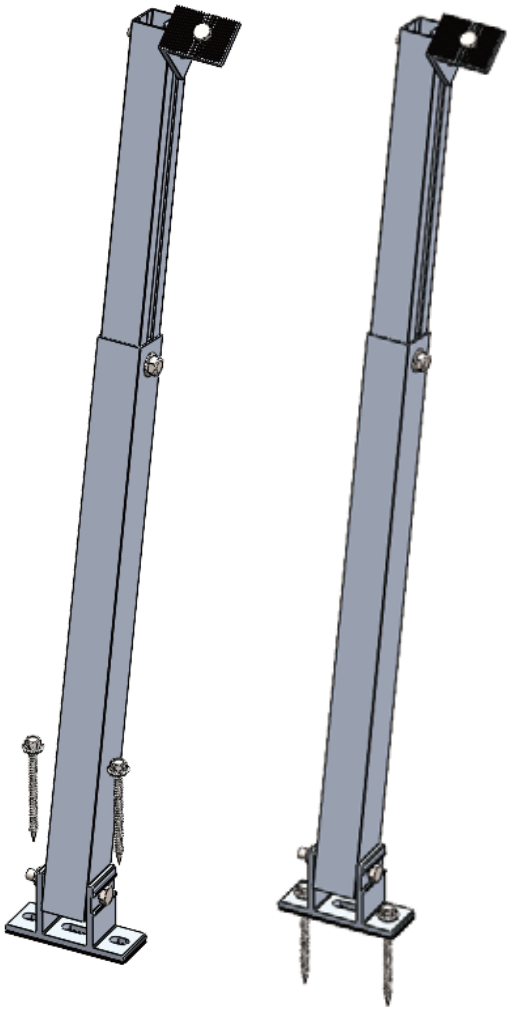

2.12 Répétez les processus ci-dessus pour fixer tous les pieds réglables.

2.12 Ripetere le indicazioni del punto precedente per fissare tutti i piedi ad angolazione regolabile al terreno.

(Please continue reading the content on the back)

2.2 Installation de panneau solaire.

2.2 Installazione del pannello solare.

2.21 Selon les dessins de conception, placez le panneau horizontalement,et fixez les boulons des pieds avant au panneau à travers les trous à l'arrière du panneau.

2.21 Ruotare il pannello solare in senso orizzontale, per il senso lungo, come mostrato nel disegno di progettazione. Poi far coincidere il foro del pannello solare (presente sul retro) con i bulloni presenti sui piedi regolabili. Tali bulloni sono stati già precedentemente fissati al terreno in modo da stabilizzare tutta la struttura al terreno.

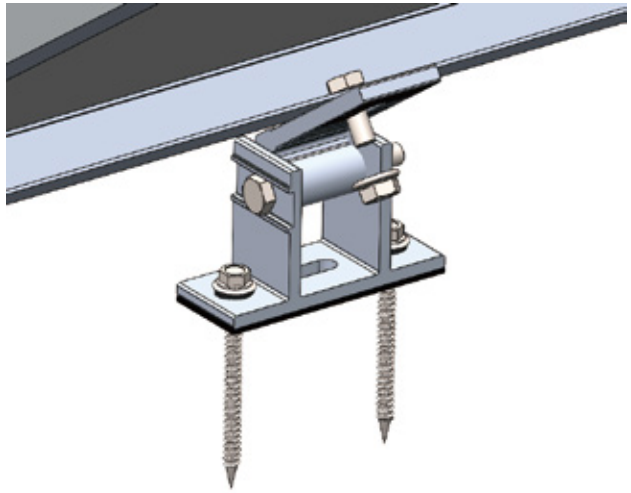

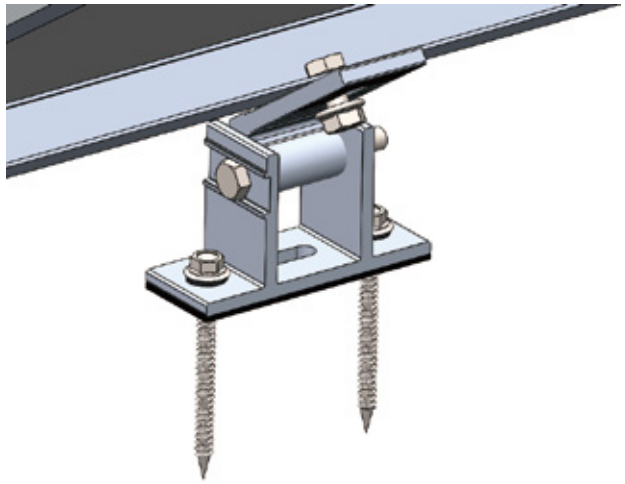

(Please continue reading the content on the back)

2.22 Faire les pieds arrière au cadre supérieur du panneau solaire.

2.22 Una volta allineato il foro e il bullone, stringere tale bullone in modo da ancorare il pannello solare all'impalcatura.

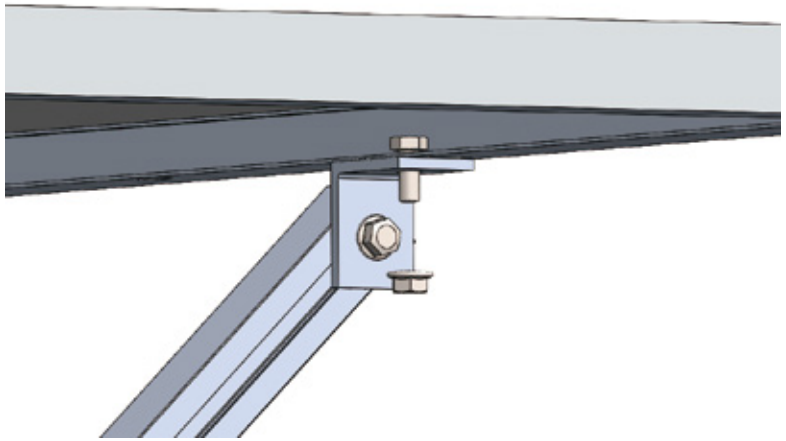

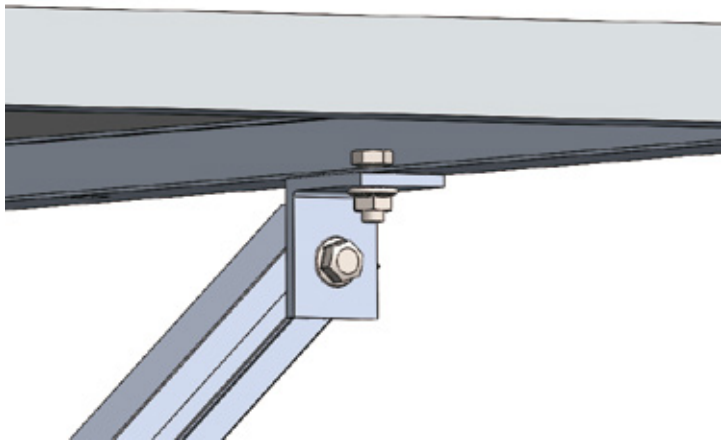

2.23 Répétez les processus ci-dessus pour fixer tous les pieds avant et arrière au panneau, et l'installation du panneau est terminée.

2.23 Ripetere le operazioni del punto precedente per fissare il pennello con tutti i piedi regolabili.

(Please continue reading the content on the back)

KSENG

2.3 Réglage de l'angle.

2.3 Orientamento dell'angolazione.

2.31 Réglez la hauteur des pieds arrière et ajustez le panneau à l'angle requis.

2.31 Regolando il bullone al centro del piede è possibile stabilire l'altezza e l'angolazione desiderata.

2.4 Terminé.

2.4 Completato l'installazione.

2.41 Serrez toutes les vis et tous les boulons du système.

2.41 Assicurarsi che tutti i bulloni siano serrati saldamente.

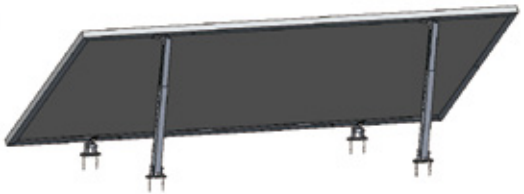

(Please continue reading the content on the back)

Purchaser/End User/Installer Notice:

Purchasers should confirm whether they are able to install this product and obtain relevant permits in accordance with local laws and regulations, including but not limited to government, community, adjacent property owners, and property rights holders.

Purchasers should engage qualified installers, professionals, or self-install only where permitted by law.

Purchasers should also ensure that the installation supports the building or its accessories safely and meets installation requirements, and is sufficient to support the product and its photovoltaic power generation system for over 20 years.

Purchasers should not install or use this product in environments with corrosive air or water, such as acids or alkalis in the vicinity.

Purchasers should fully assess and bear the consequences of product installation and usage and their impact on the surroundings, including but not limited to potential lightning strikes, electrical or magnetic conduction, light reflection/pollution, obstruction of passage, collision with people, snow accumulation and ice shedding, depreciation of buildings, and their consequences.

Purchasers are solely responsible for safety during installation, throughout the installation process, and subsequent usage, and/or any impact on third parties.

After installing the product, purchasers or their appointed installers should carry out waterproof, leak-proof, and anti-seepage construction at the junction of the product and the building to protect the building supporting the product, and conduct periodic inspections and maintenance in the future (at intervals not exceeding 1 year).

Purchasers should be aware that nothing other than the photovoltaic power generation system should be supported on this product, and no additional weight should be placed on the product during installation or subsequent usage, particularly human suspension or leaning. It should not be used for any purpose other than supporting photovoltaic brackets. Purchasers should be aware that nothing other than the photovoltaic power generation battery system should be supported on this product, and no additional weight should be placed on the product during installation or subsequent usage,

(Please continue reading the content on the back)

KSENG

particularly human suspension or leaning. It should not be used for any purpose other than supporting photovoltaic brackets.

We shall not be liable for any consequences resulting from failure to comply with local legal requirements and/or failure to follow instructions, warnings, etc., during the installation of this product, nor shall we be liable for any losses to the supporting building or any third party resulting from the installation process or subsequent usage, nor shall we be liable for any multiple installations, disassembly and reuse, or second-hand purchases of this product.